$$P_{11} = \alpha_1\beta_1 + \alpha_2\beta_3 = 0.9 \times 0.75 + 0.1 \times 0.25 = 0.7$$
$$P_{12} = \alpha_1\beta_2 + \alpha_2\beta_4 = 0.9 \times 0.25 + 0.1 \times 0.75 = 0.3$$
$$P_{21} = \alpha_3\beta_1 + \alpha_4\beta_3 = 0.1 \times 0.75 + 0.9 \times 0.25 = 0.3$$
$$P_{22} = \alpha_3\beta_2 + \alpha_4\beta = 0.1 \times 0.25 + 0.9 \times 0.75 = 0.7$$

Channel Capacity, C = 1+ p log p + q log q = 1 + 0.7 log 0.7+ 0.3 log 0.3

= 1 - 0.88 = 0.12

CAPACITY OF A BAND-LIMITED GAUSSIAN CHANNEL

For finding the capacity of a band-limited Gaussian channel, we have to know about Shannon's theorem & Shannon- Hartley theorem

SHANNON'S THEOREM

If there exist a source that produces 'M' number of equally likely messages generating information at the information rate 'R' with channel capacity 'C', then if R ≤ C; there exist a coding technique such that we can transmit message over the channel with minimum probability of error.

NEGATIVE STATEMENT

If there exist a source that produces 'M' number of equally likely messages generating information at the information rate 'R' with channel capacity 'C', then if R > C; there exist a coding technique such that we can transmit message over the channel with probability of error which is close to one.

SHANNON- HARTLEY THEOREM

Shannon- Hartley theorem is applicable to the channel affected by Gaussian noise. It states that, the channel capacity of a white, band limited Gaussian channel is

$$C = B \log_2\left(1 + S/N\right)$$

Where, B is the channel bandwidth

S is the signal power

N is the noise power; N = ηB

$\frac{\eta}{2}$ is the two sided power spectral density

DERIVATION

For the purpose of transmission over a channel the messages are repeated by fixed voltage levels. Then the source generates one message after another in sequence. The transmitted signal s(t) can be shown in figure as:

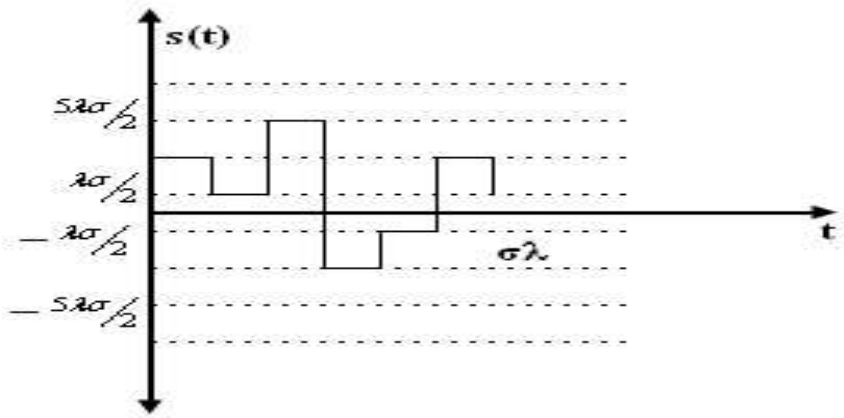

σ is the root mean square voltage of noise in the signal

λ is a multiple which is kept large to recognize individual levels

σλ is the step size.

The levels are located at voltages $\pm \lambda\sigma/2$, $\pm 3\lambda\sigma/2$, $\pm 5\lambda\sigma/2$

The average signal power, if there are M signals or M levels is

$$S = \frac{V_1^2 + V_2^2 + V_3^2 + \ldots\ldots + V_M^2}{M}$$

Here the voltage levels are $\pm \lambda\sigma/2$, $\pm 3\lambda\sigma/2$, $\pm 5\lambda\sigma/2$

$$\therefore S = \frac{\left(\frac{\lambda\sigma}{2}\right)^2 + \left(-\frac{\lambda\sigma}{2}\right)^2 + \left(\frac{3\lambda\sigma}{2}\right)^2 + \left(-\frac{3\lambda\sigma}{2}\right)^2 + \ldots\ldots\left(\frac{(M-1)\lambda\sigma}{2}\right)^2 + \left(-\frac{(M-1)\lambda\sigma}{2}\right)^2}{M}$$

M-1 because, if we take 8 levels the last level is $7\lambda\sigma/2$

$$i.e. S = \frac{2}{M}\left[\left(\frac{\lambda\sigma}{2}\right)^2 + \left(\frac{3\lambda\sigma}{2}\right)^2 + \ldots + \left(\frac{(M-1)\lambda\sigma}{2}\right)^2\right]$$

$$= \frac{2}{M}\left(\frac{\lambda\sigma}{2}\right)^2 \left[1^2 + 3^2 + \ldots + (M-1)^2\right]$$

$$= \frac{2}{M}\frac{(\lambda\sigma)^2}{4}\left[\frac{M(M^2-1)}{6}\right]$$

$$= \frac{(M^2-1)}{12}(\lambda\sigma)^2$$

From this

$$M^2 - 1 = \frac{12S}{(\lambda\sigma)^2} \Rightarrow M^2 = 1 + \frac{12S}{(\lambda\sigma)^2}$$

$$M = \left[1 + \frac{12S}{(\lambda\sigma)^2}\right]^{1/2}$$

Noise power, N is the square of root mean square noise voltage. I.e. $N = \sigma^2$.

$$\therefore M = \left[1 + \frac{12S}{\lambda^2 N}\right]^{1/2} \ldots\ldots\ldots\ldots\ldots\ldots(1)$$

Each message is equally likely. Then we can write entropy, $H = \log_2 M$

$$\therefore H = \log_2\left[1 + \frac{12S}{\lambda^2 N}\right]^{1/2}$$

$$= \frac{1}{2}\log_2\left[1 + \frac{12S}{\lambda^2 N}\right] \ldots\ldots\ldots\ldots\ldots(2)$$

We know that the rate of information, R = rH…… (3)

By Shannon's theorem, we know that $R \leq C$. then the transmission takes place with less probability of error. I.e. $R \approx C$

$$\therefore C = rH = r \times \frac{1}{2}\log_2\left[1 + \frac{12S}{\lambda^2 N}\right] \ldots\ldots\ldots\ldots (4)$$

By Sampling theorem, the Nyquist rate r is given by r = 2B, B is the bandwidth.

$$\therefore C = 2B \times \frac{1}{2}\log_2\left[1 + \frac{12S}{\lambda^2 N}\right] = B\log_2\left[1 + \frac{12S}{\lambda^2 N}\right]$$

Substitute $\lambda^2 = 12$.

$$\therefore C = B\log_2\left[1+\frac{S}{N}\right] bits/\sec$$

The Shannon- Hartley theorem specifies the rate at which the information may be transmitted with small probability of error. Thus Shannon- Hartley theorem contemplates that, with a sufficiently sophisticated transmission technique, transmission at channel capacity is possible with arbitrarily small probability of error

SIGNIFICANCE OF SHANNON- HARTLEY THEOREM

The significance of Shannon- Hartley theorem is that it is possible to transmit symbols over a AWGN channel of bandwidth 'B' Hz at a rate of 'C' bits/second with an arbitrarily small probability of error, if the signal is encoded in such a manner that the samples are all Gaussian signals. It is achieved by orthogonal codes.

The Shannon- Hartley theorem gives an idea about Bandwidth - SNR trade off.

BANDWIDTH - SNR TRADE OFF

The trade off is the exchange of bandwidth with signal to noise power ratio.

Suppose $S/N = 7 \;\&\; B = 4kHz$, then C = 12,000 bits/sec.

Suppose $S/N = 15 \;\&\; B = 3kHz$, then C = 12,000 bits/sec.

That is, for a reduction in bandwidth, we require an increment in signal to noise ratio. We know that

$$C = B\log_2\left[1+\frac{S}{N}\right] \qquad i.e. 1 = \frac{B}{C}\log_2\left[1+\frac{S}{N}\right]$$

By plotting B/C against S/N, we get

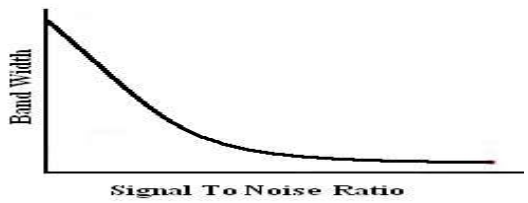

From the figure we know that when SNR increases the BW decreases. At SNR > 10, the reduction in bandwidth increasing SNR is poor. The use of larger bandwidth for smaller SNR is called **coding upwards** (E.g. FM, PM, PCM) and the use of smaller bandwidth for larger SNR is called **coding downwards** (E.g. PAM). This trade off can be seen when we take the capacity of a channel of infinite bandwidth

CAPACITY OF A CHANNEL OF INFINITE BANDWIDTH

By Shannon Hartley theorem, $\therefore C = B\log_2\left[1+\frac{S}{N}\right]$

When bandwidth becomes infinite, the capacity of the channel increases. But it doesn't become infinite because with the increase in bandwidth, the noise power also increases (N = ηB). Thus the capacity approaches an upper limit with increasing bandwidth.

$$\begin{aligned}\therefore C &= B\log_2\left[1+\frac{S}{N}\right]\\ &= B\log_2\left[1+\frac{S}{\eta B}\right]\\ &= \frac{S}{\eta}\times\frac{\eta}{S}\times B\log_2\left[1+\frac{S}{\eta B}\right]\\ &= \frac{S}{\eta}\times\log_2\left[1+\frac{S}{\eta B}\right]^{\frac{S}{\eta B}}\end{aligned}$$

We know that $\lim_{x\to 0}(1+x)^{\frac{1}{x}} = e$

When the bandwidth tends to infinity,

$$\begin{aligned}\therefore C_\infty &= \lim_{B\to\infty} C\\ &= \lim_{B\to\infty}\left\{\frac{S}{\eta}\times\log_2\left[1+\frac{S}{\eta B}\right]^{\frac{S}{\eta B}}\right\}\end{aligned}$$

$$As\, B\to\infty,\ \frac{S}{\eta B}\to 0$$

$$= \lim_{\frac{S}{\eta B} \to 0} \left\{ \frac{S}{\eta} \times \log_2 \left[1 + \frac{S}{\eta B} \right]^{\frac{S}{\eta B}} \right\}$$

$$= \frac{S}{\eta} \times \log_2 e$$

$$\therefore C = 1.44 \times \frac{S}{\eta}$$

ORTHOGONAL SIGNAL TRANSMISSION

Shannon has suggested an idealized communication system to achieve transmission at capacity R ≈ C where different samples of white noise waveforms of average power 'S' is used for transmission. The system uses orthogonal signals $S_1(t)$, $S_2(t)$,……..$S_M(t)$. These orthogonal signals have the property that

$$\int_0^T S_i(t) S_j(t) dt = \int_0^T S_i^2(t) dt = E_S; \quad if \quad i = j$$

$$= \quad 0 \qquad ; if \quad i \neq j$$

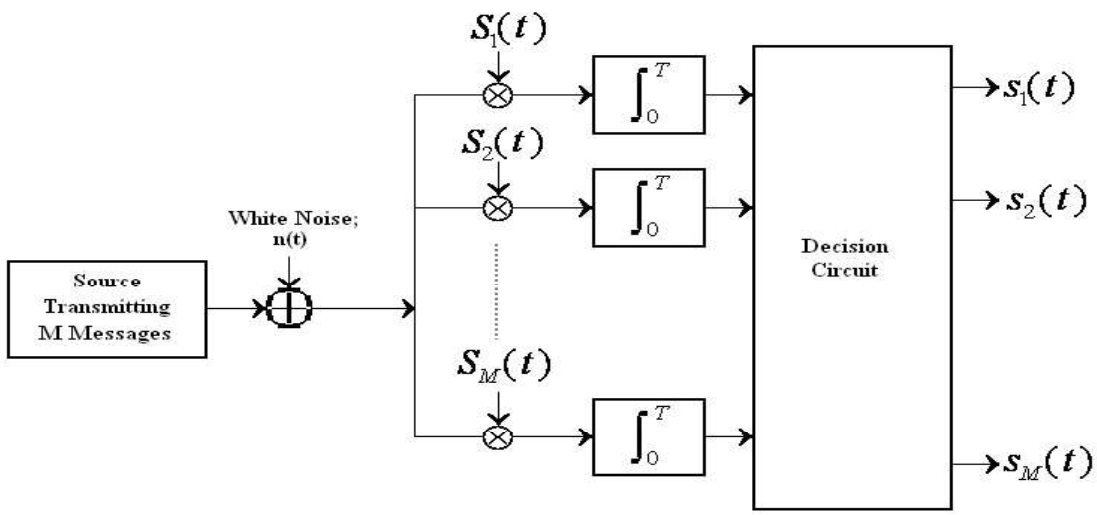

Matched Filter Reception

When $S_1(t)$ is transmitted, then the output of all correlators (combination of multipliers & integrators) expect first correlator will be zero due to orthogonal property.

Then the output of 1st correlator is $e_1 = \int_0^T S_1(t)S_1(t)dt = \int_0^T S_1^{\,2}(t)dt = E_S$

When noise is added, $e_1 = \int_0^T [S_1(t) + n(t)]\, S_1(t)dt = E_S + n_k$

This depends only on signal energy because $n_k(t) = \eta E_S / 2$ and $n_k = \eta E_S / 2 \; S_1(t)$. Thus there is no difficulty for the decision circuit to identify the transmitted signals. Here E_S is the amplitude of the signal.

SHANNON'S LIMIT

To find the Shannon's limit, we have to find their minimum value of bit energy to noise density E_b / N_o.

In practical channels, the noise power N_o is generally a constant. If E_b is the transmitted energy per bit. Then the average transmitted power, **S = E_bC…… (1)**

The two sided power spectral density of AWGN channel is $N_o / 2$

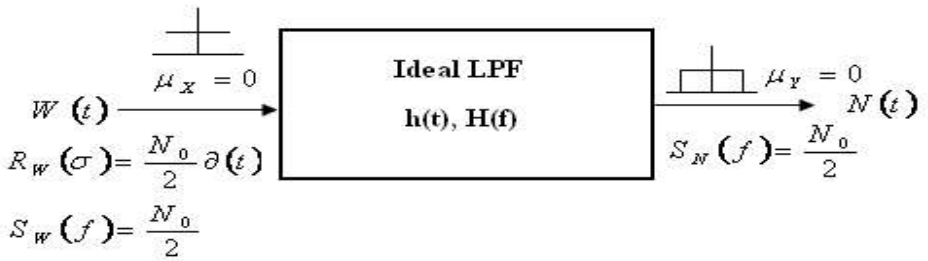

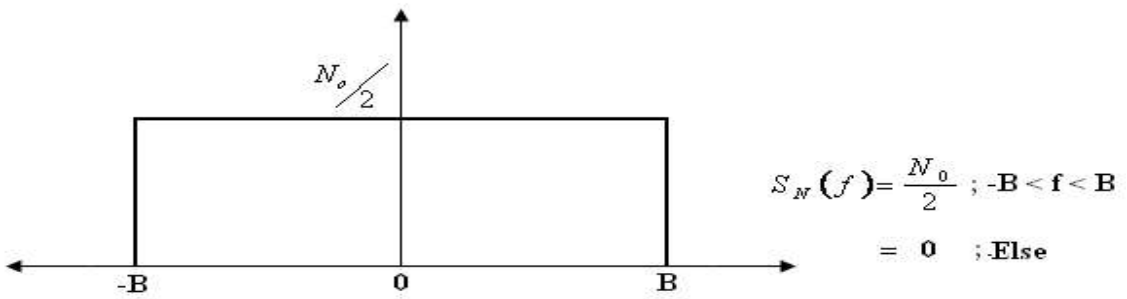

Here the $S_N(f)$ & $R_N(\sigma)$ are Fourier pairs.

$$R_N(\sigma) = \int_{-B}^{B} \frac{N_0}{2} e^{j2\pi f\sigma} df$$

$$= \frac{N_0}{2} \frac{e^{j2\pi f\sigma}}{j2\pi\sigma}\Bigg|_{-B}^{B}$$

$$= \frac{N_0}{2\pi\sigma} \frac{e^{j2\pi\sigma B} - e^{-j2\pi\sigma B}}{j2}$$

$$= N_0 \frac{\sin 2\pi\sigma B}{2\pi\sigma} = N_0 B \frac{\sin 2\pi\sigma B}{2\pi\sigma B}$$

= N_0B x sinc 2σB

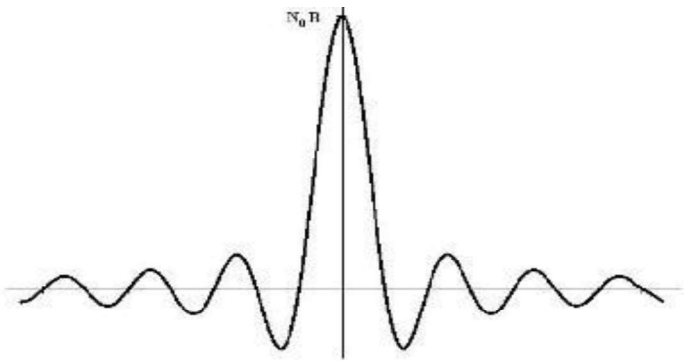

That is, the total output power = **N_0B……. (2)**

Apply equation (1) & equation (2) in Shannon Hartley theorem, we get

$$C = B\log_2\left(1+\frac{S}{N}\right) = B\log_2\left(1+\frac{E_b C}{N_0 B}\right)$$

Here,

$$2^{C/B} = 1 + \frac{E_b C}{N_0 B} \quad \Rightarrow \quad \frac{E_b C}{N_0 B} = 2^{C/B} - 1$$

$$\frac{E_b}{N_0} = \frac{2^{C/B} - 1}{C/B};$$

Here C/B is the band width efficiency

$If\ {}^{C}\!/_{B} = 1\ then\ {}^{E_b}\!/_{N_0} = 1$. This implies $E_b = N_0$. That is the signal energy is equal to the noise energy.

We have

$$C = B\log_2\left(1+\frac{E_b C}{N_0 B}\right)$$

$$Here\ apply, \frac{E_b}{N_0} = 1$$

$$C = B\log_2\left(1+\frac{C}{B}\right)$$

$$\frac{C}{B_0} = \frac{B}{B_0}\log_2\left(1+\frac{C}{B}\right)$$

We know that channel capacity must be maximum when we utilize the maximum band width. That is the channel capacity must be equal to the maximum band width,

$C = B_0$

$$\frac{C}{B_0} = \frac{B}{B_0}\log_2\left(1+\frac{B_0}{B}\right)$$

$$= \log_2\left(1+\frac{B_0}{B}\right)^{B/B_0}$$

$$C = B_0\log_2\left(1+\frac{B_0}{B}\right)^{B/B_0}$$

$$C_{\max} = B_0\log_2 e = 1.44\,B_0$$

$$S = E_b C = N_0 B$$

$$\left(\because \frac{C}{B} = 1\ \&\ \frac{E_b}{N_0} = 1 \Rightarrow \frac{E_b}{N_0} = \frac{B}{C}\right)$$

$$\lim_{B\to\alpha}\frac{E_b}{N_0} = \lim_{B\to\alpha}\frac{B_0}{C} = \frac{B_0}{C_{\max}} = \frac{B_0}{1.44B_0} = 0.6944$$

$$\frac{E_b}{N_0}_{\min} = -1.5836\,dB$$

This is **Shannon's Limit.**

PROBLEMS

32. A voice grade channel of a telephone network has a bandwidth of 3.4 kHz.

a. Calculate the channel capacity of the telephone channel for a signal to noise ratio of 30dB.

b. Calculate the minimum signal to noise ratio required to support information transmitted through the telephone channel at a rate of 4800bits per seconds.

Ans:

a. B = 3.4 kHz, SNR = 30dB

$10 \times \log_{10} SNR = 30$

$\log_{10} SNR = 3$

$SNR = 1000$

We have

$$C = B\log_2[1+SNR]$$
$$= 3400 \times \log_2[1+1000]$$
$$= 33.8\,kbps$$

b. B = 3.4 kHz, C = 4.8kbps

$$C = B\log_2[1+SNR]$$
$$4800 = 3400 \times \log_2[1+SNR]$$
$$\log_2[1+SNR] = 1.41 \quad \Rightarrow 1+SNR = 2.65$$
$$SNR = 1.65$$

$10 \times \log_{10} 1.65 = 30$

SNR = 2.2dB

33. A communication system employs a continuous source. The channel noise is white and Gaussian. The bandwidth of the source output is 10MHz and SNR is 100.

a. Determine the channel capacity.

b. If the SNR drops to 10, how much bandwidth is needed to achieve the same channel capacity?

c. If the bandwidth is decreased to 1MHz, how much SNR is required to maintain the same channel capacity?

Ans:

a. B = 10MHz, SNR = 100

$$C = B\log_2[1+SNR]$$
$$= 10^7 \times \log_2[1+100]$$
$$= 66.5\,Mbps$$

b. SNR = 10, C = 66.5 Mbps

$$C = B\log_2[1+SNR]$$
$$66.5\times10^6 = B\log_2[1+10]$$
$$B = 19.22\,MHz$$

c. B = 1 MHz, C = 66.5 Mbps

$$C = B\log_2[1+SNR]$$
$$66.5\times10^6 = 10^6 \times \log_2[1+SNR]$$
$$\log_2[1+SNR] = 66.5$$
$$SNR = 1.04\times10^{20}$$

$10 \text{ x } \log_{10} 1.04\text{x}10^{20} = 30$

SNR = 200.2dB

34. Alphanumeric data are entered into a computer from a remote terminal through a voice grade telephone channel. The channel has a bandwidth of 3.4 kHz and output signal to noise power ratio of 20dB. The terminal has a total of 128 symbols which may be assumed to occur with equal probability and that the successive transmissions are statistically independent.

d. Calculate the channel capacity.

e. Calculate the maximum symbol rate for which error free transmission over the channel is possible?

Ans:

a. B = 3.4 kHz, SNR = 20dB

$10 \text{ x } \log_{10} \text{SNR} = 20$

SNR = 100

$$C = B\log_2[1+SNR]$$
$$= 3400\times\log_2[1+100]$$
$$= 22640bps$$

b. $H_{max} = \log_2 128 = 7$bps, C = 22640bps

We have R = r x H. That is C = r x H.

$$r = \frac{C}{H} = \frac{22640}{7} = 3234bps$$

35. A black and white television picture may be viewed as consisting of approximately $3x10^5$ elements; each one of which may occupy one of 10 distinct brightness levels with equal probability. Assume the rate of transmission to be 30 picture frames per second, and the signal to noise ratio is 30dB. Using channel capacity theorem, calculate the minimum bandwidth required to support the transmission of the resultant video signal?

Ans:

No. of different pictures possible = $10^{3\times10^5}$

Entropy, H = $\log_2 10^{3\times10^5}$

$$= 3\times10^5\log_2 10$$
$$= 3\times10^5\times3.32$$
$$= 9.97\times10^5$$

Capacity, C = R = r x H

$= 30 \text{ x } 9.97 \text{ x } 10^5 = 29.9 \text{ x } 10^6$

We know that C = B $\log_2$ (1+SNR)

$29.9 \text{ x } 10^6 = B \log_2 (1+1000)$

B = 3MHz